THICKNESS GAUGES

Digital Thickness Gauge

SID-540
Resolution .0005"/0.01mm
Measuring Range .5"/12.7mm
Depth 1.18"/30mm
Contact Point and Anvil
(Ceramic)

SID-565
Resolution .00005"/0.001mm
Measuring Range .5"/12.7mm
Depth 1.18"/30mm
Contact Point and Anvil
(Ceramic)
(Movable anvil type)

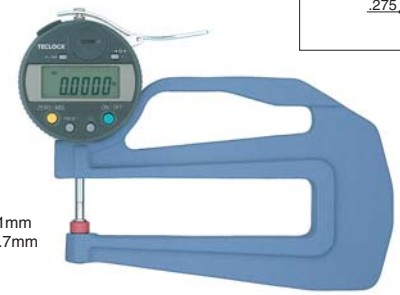

SID-550
Resolution .0005"/0.01mm
Measuring Range .5"/12.7mm
Depth 4.72"/120mm
Contact Point and Anvil
(Ceramic)

Dimensions: SID-540

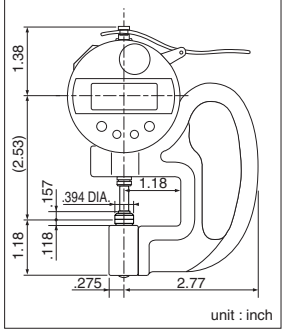

Dimensions: SID-565

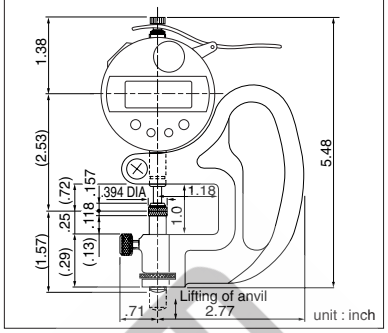

Dimensions: SID-550

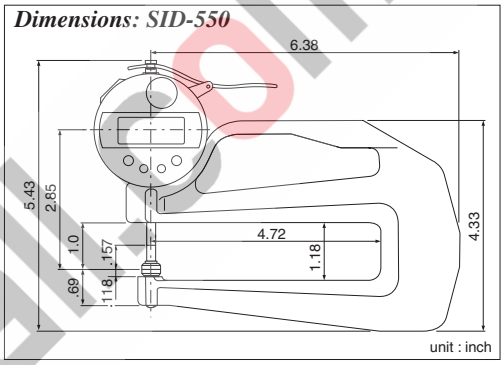

Specifications

Model	Resolution (inch/mm)	Total Range (inch/mm)	Measuring Force N(gf)	Weight (g)	Remark
SID-540	.0005/0.01	.5/12.7	1.0(100) or less	290	
SID-550	.0005/0.01	.5/12.7	1.0(100) or less	440	
SID-565	.00005/0.001	.59/15	1.5(150) or less	470	

Dial Thickness Gauge

SI-112
Graduation .001"
Measuring Range .5"
Contact Point and Anvil (Ceramic)

SI-530
Graduation .001"
Measuring Range 1.0"
Contact Point and Anvil (Ceramic)

Dimensions: SI-112

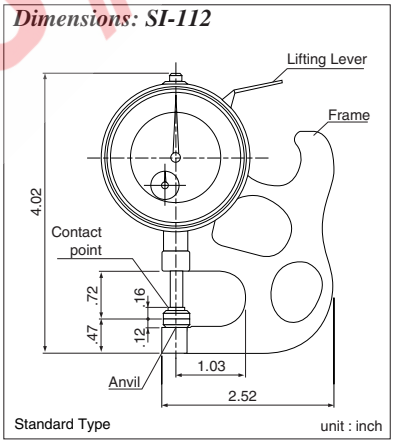

Dimensions: SI-530

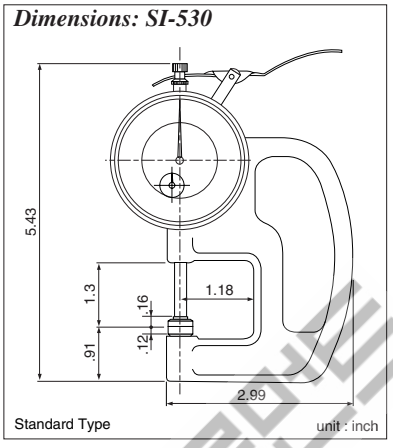

Specifications

Model	Graduation (inch)	Total Range (inch)	Range per Rev. (inch)	Dial Reading	Contact point form (inch)	Anvil form (inch)	Measuring Force N(gf)	Weight (g)
SI-112	.001	.5	.10	±0-50-100	.394 DIA. Flat	.394 DIA. Flat	2.5(250) or less	145
SI-112LS	.001	.5	.10	±0-50-100	S.125(1/8) DIA.	.394 DIA. Flat	2.5(250) or less	145
SI-112LW	.001	.5	.10	±0-50-100	S.125(1/8) DIA.	S.125(1/8) DIA.	2.5(250) or less	145
SI-112-3A	.001	.5	.10	±0-50-100	.197 DIA. Flat	.197 DIA. Flat	2.5(250) or less	145
SI-530	.001	1.0	.10	±0-50-100	.394 DIA. Flat	.394 DIA. Flat	3.5(350) or less	200
SI-530LS	.001	1.0	.10	±0-50-100	S.125(1/8) DIA.	.394 DIA. Flat	3.5(350) or less	200
SI-530LW	.001	1.0	.10	±0-50-100	S.125(1/8) DIA.	S.125(1/8) DIA.	3.5(350) or less	200
SI-530-3A	.001	1.0	.10	±0-50-100	.197 DIA. Flat	.197 DIA. Flat	3.5(350) or less	200